2018 ACE SCHOOL & RUS SYMPOSIUM
TERMINUS
CONNECTING POINTS OF OPPORTUNITY

Trends in Packet Optical Transport

Speaker:

- Brian M. LeCuyer, PE
  Vice President
  RVW, Inc.
  blecuyer@rvwinc.com

Trends in Packet/Optical Technology

- Ethernet Technology Growth: 1G/10G/40G/100G/200G/400G/1T
  - Port Density and Power Improvements: Terabit Capacity in 1RU
  - Increased Reliability and Stability
  - Cost Reductions by Economies of Scale
- ROADM Technology Advancements
  - Reduced Channel Spacing (More Wavelengths)
  - Colorless / Directionless / Contentionless Switching
  - Cost Reductions by Economies of Scale

Network Case Study

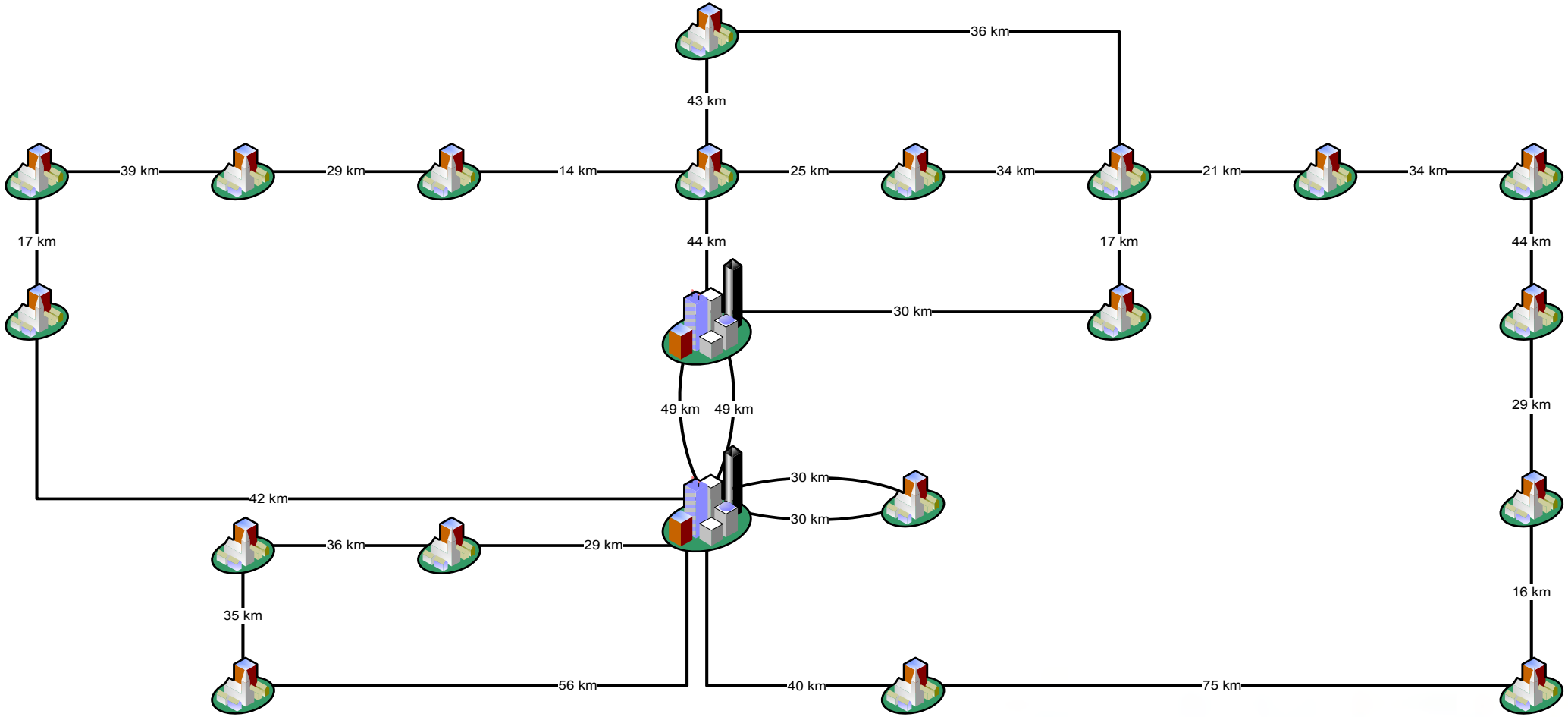

RVW
2018 ACE SCHOOL & RUS SYMPOSIUM
TERMINUS ATLANTA
CONNECTING POINTS OF OPPORTUNITY
Association of Communication Engineers
ACE

Distributed Packet Design

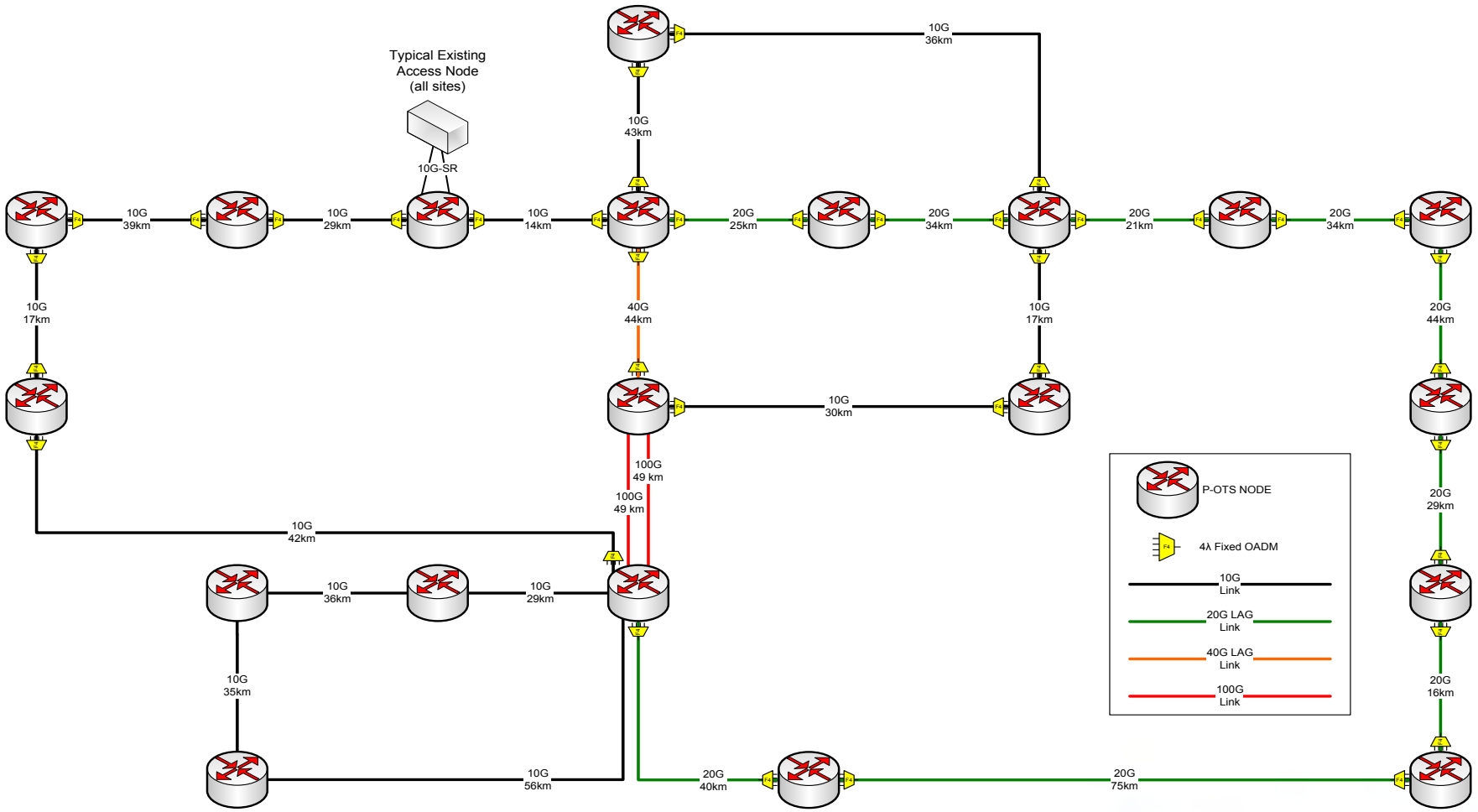

2018 ACE SCHOOL & RUS SYMPOSIUM
TERMINUS ATLANTA
CONNECTING POINTS OF OPPORTUNITY

Distributed Packet Design

- Minimal change in existing network architecture
- “Traditional” design with local aggregation in Each C.O.
- Future growth by 10G-LAG and/or 100G
- Network growth requires upgrading large segments of network
- Duplication of capabilities provided by access network
- Why do we need a packet switch/router?

ROADM – Collapsed Packet Design

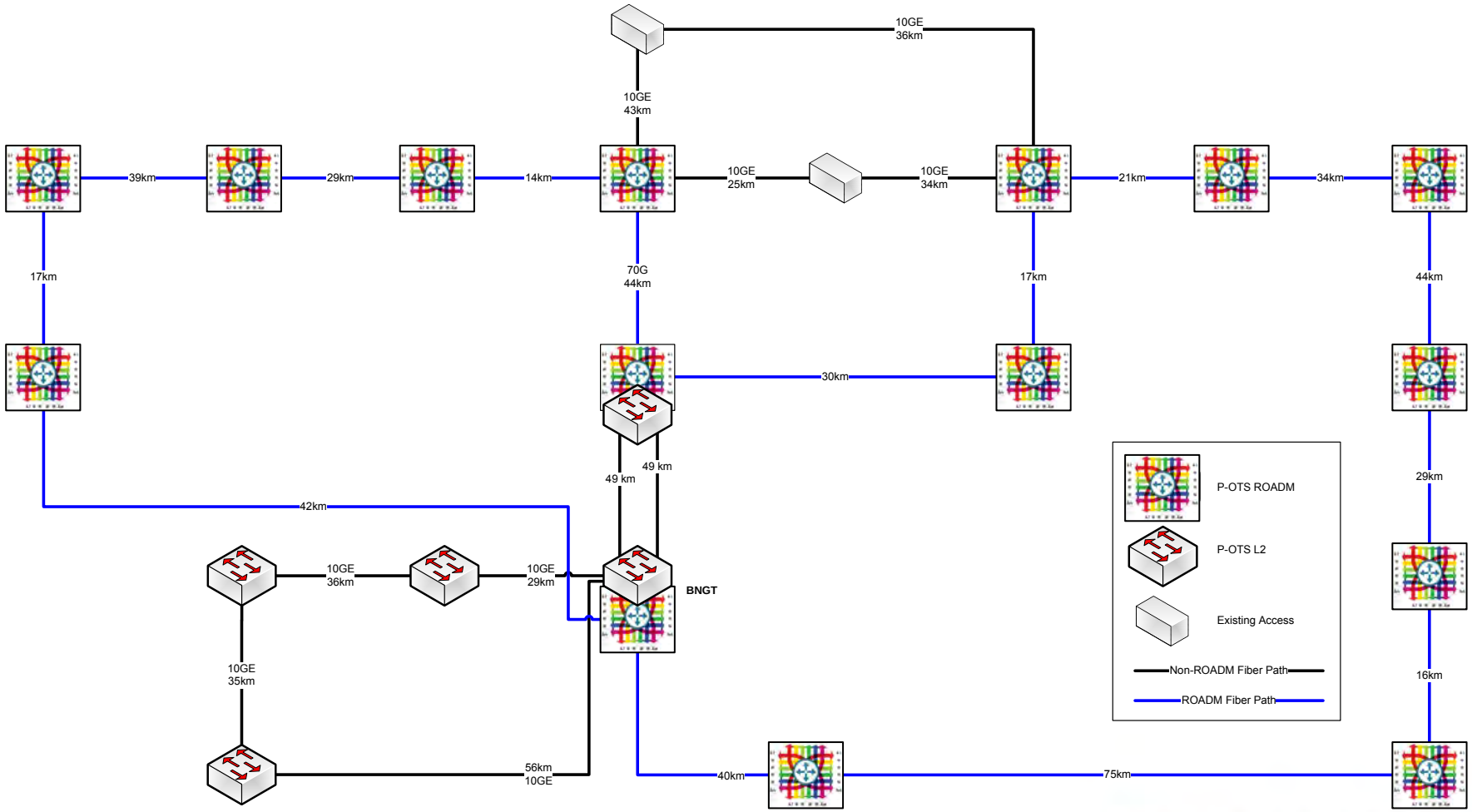

2018 ACE SCHOOL & RUS SYMPOSIUM
TERMINUS ATLANTA
CONNECTING POINTS OF OPPORTUNITY

ROADM – Collapsed Packet Design

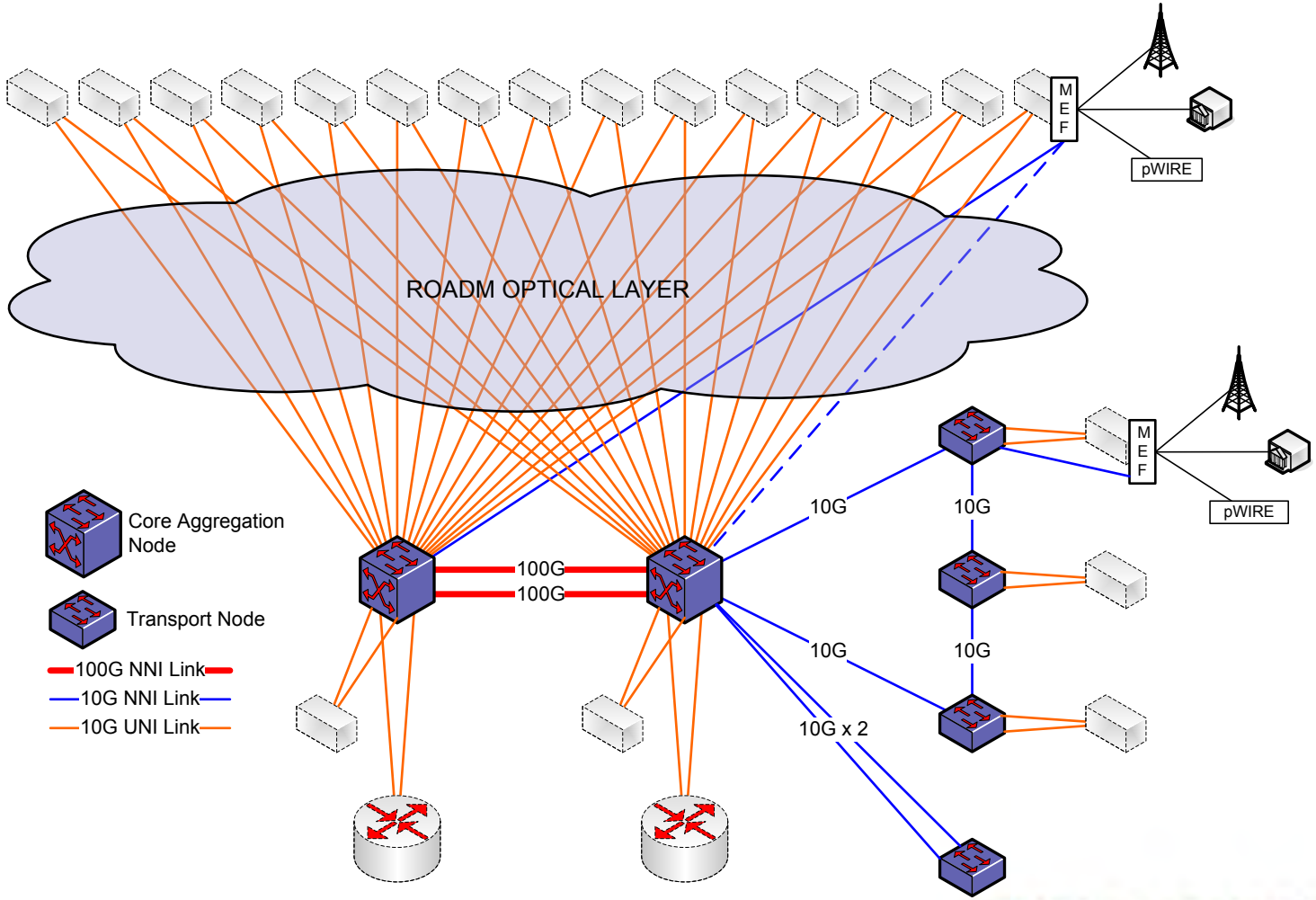

2018 ACE SCHOOL & RUS SYMPOSIUM
TERMINUS ATLANTA
CONNECTING POINTS OF OPPORTUNITY

Network Cost Summary

Design Option	Network Deployment Cost	Cost per Node	Cost per Gigabit
Distributed Packet Network Design	$1,420,000	$68,000	$23,700
100G Distributed Packet Network	$1,510,000	$72,000	$11,600
ROADM with Collapsed Packet Design	$1,590,000	$76,000	$9,400

2018 ACE SCHOOL & RUS SYMPOSIUM
TERMINUS
CONNECTING POINTS OF OPPORTUNITY

Trends in Packet Optical Transport

Speaker:

- Brian M. LeCuyer, PE
  Vice President
  RVW, Inc.
  blecuyer@rvwinc.com